Fabas Luce S.p.a.
Via Luigi Talamoni 75,
20861 BRUGHERIO MB - ITALY
Tel. +39 039 890691
Fax. +39 039 2142208
info@fabasluce.it - www.fabasluce.it

Neutra

Code	**3386-35-101**
Type	Table lamp
Designer	Variaforma
Eancode	8019282511472
Customs tariff	94052190
Color	Black
Material	Metal and methacrylate frame
IP	IP20
Insulation Class	CL2
Item Dimensions	270mm Ø240mm - 1.8kg
Packaging Dimensions	300x300x320mm - 2kg
	Light Source 1
Light source	LED Built-in
Power Pack Type	Touch dimmer
Light Source Lumen	1260 lm
Color Temperature	Warm white 3000K
Energy Efficiency Class	A↑G E
	Electrical specifications 1
Input Voltage	230V AC 50Hz
Total Absorbed Power	12W

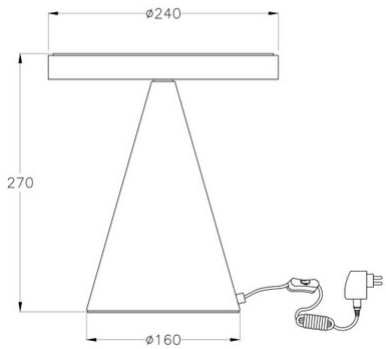

CE